United States Senate Desk

Desk # 45

Front View

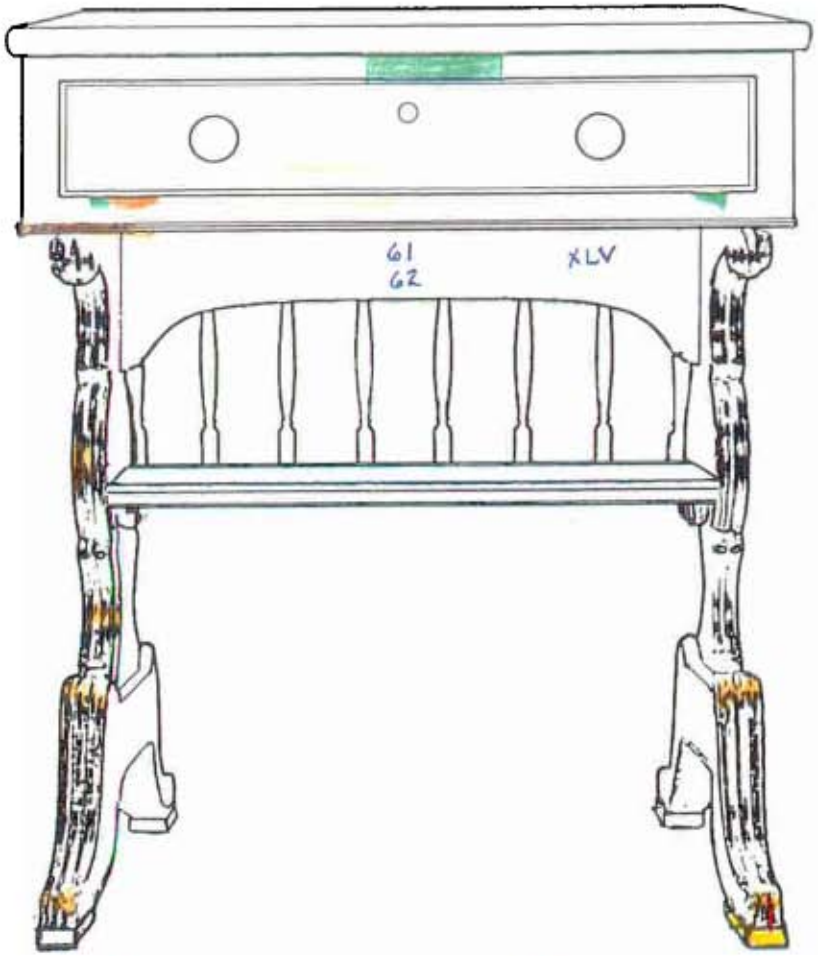

Rear View

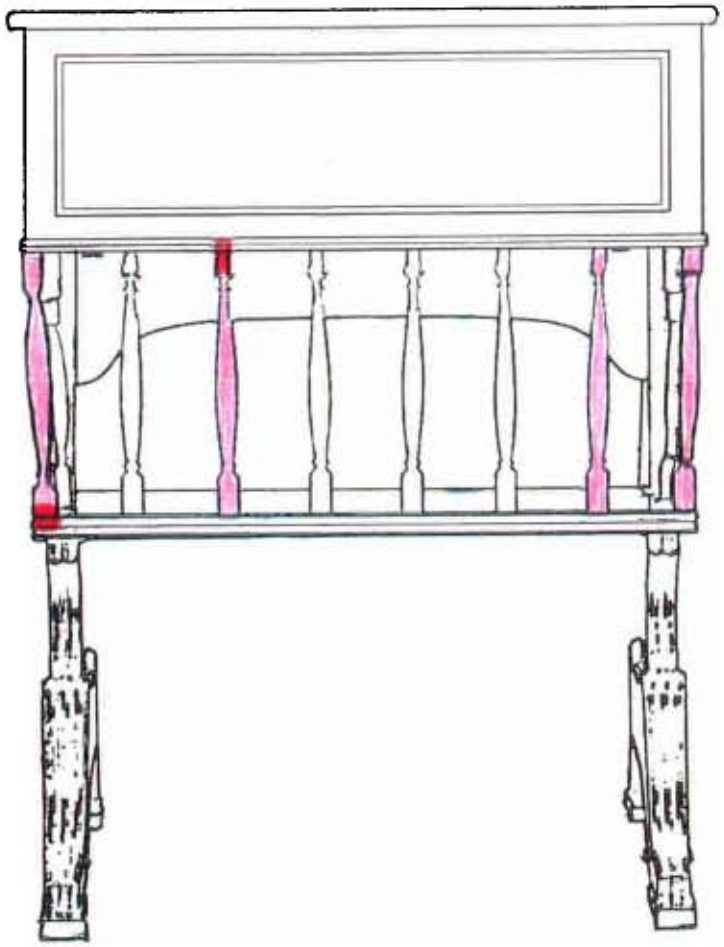

- Loose/broken/delaminated
- Damage/wear/hole
- Previous repair
- Replaced piece
- Missing
- Spindles not original to desk
- Add-ons
- Inscriptions

United States Senate Desk

Desk # 45

Right Side

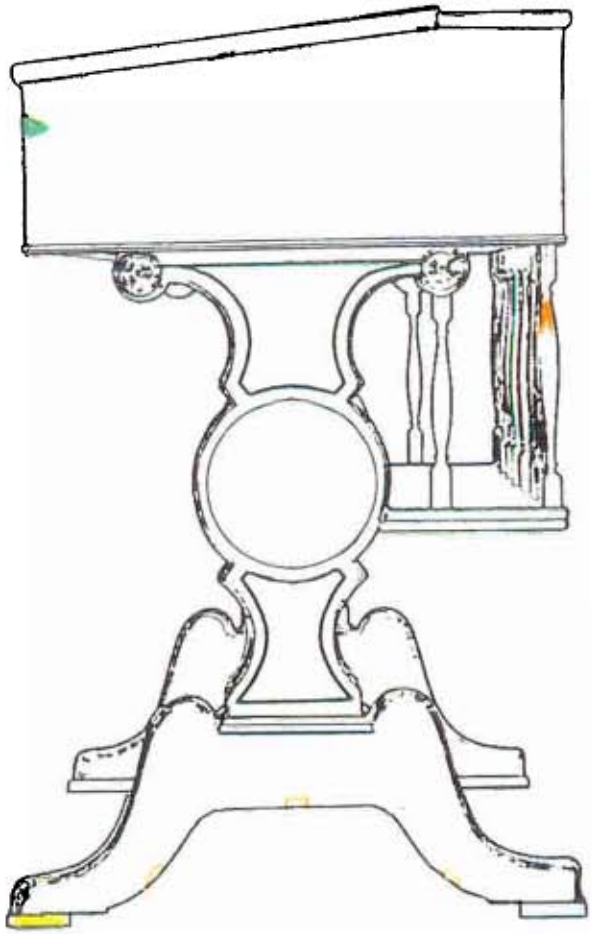

Left Side

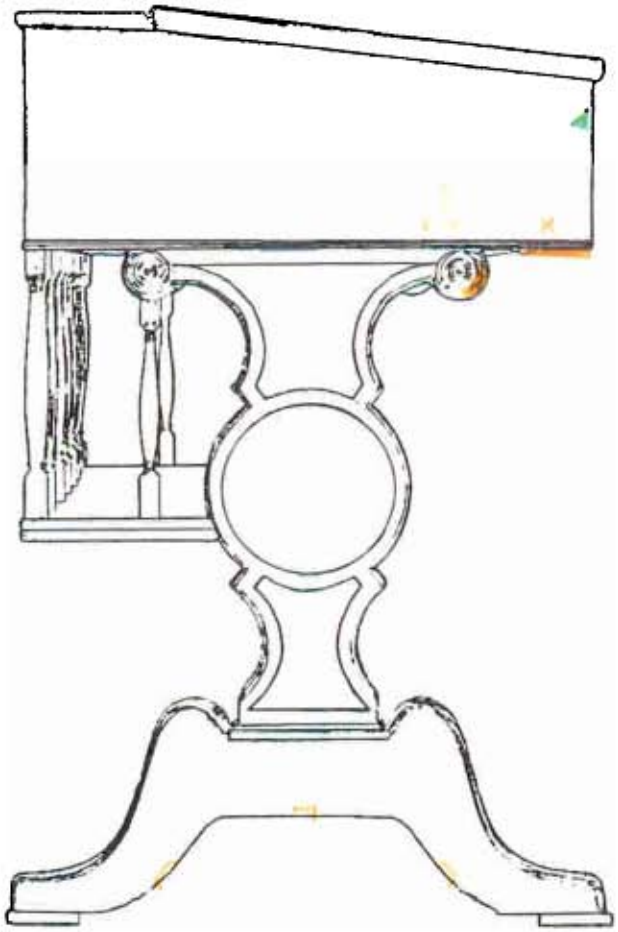

- Loose/broken/delaminated
- Damage/wear/hole
- Previous repair
- Replaced piece
- Missing
- Spindles not original to desk
- Add-ons
- Inscriptions

United States Senate Desk

Desk # 45

Top

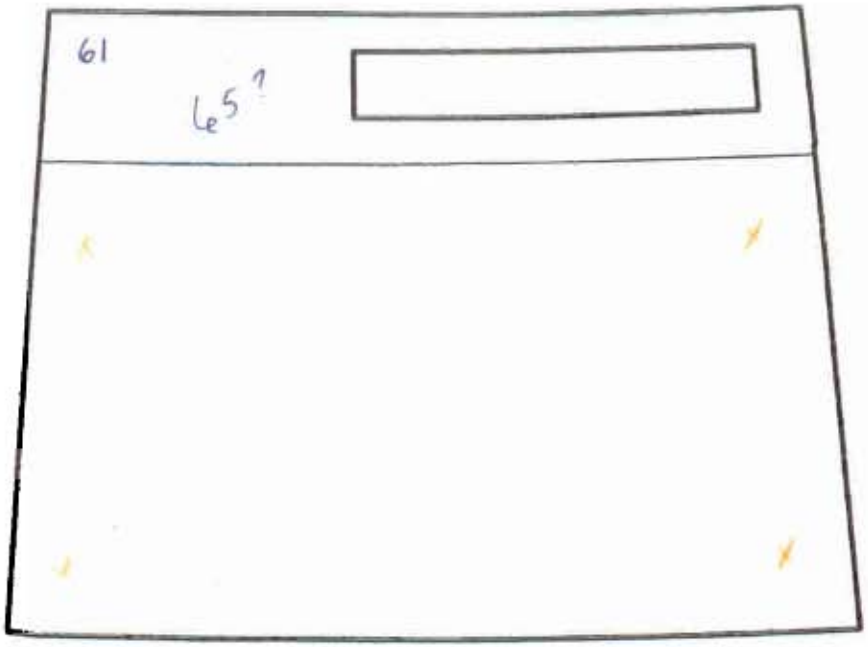

- Loose/broken/delaminated
- Damage/wear/hole
- Previous repair
- Replaced piece
- Missing
- Spindles not original to desk
- Add-ons
- Inscriptions

United States Senate Desk

Desk # 45

Bottom

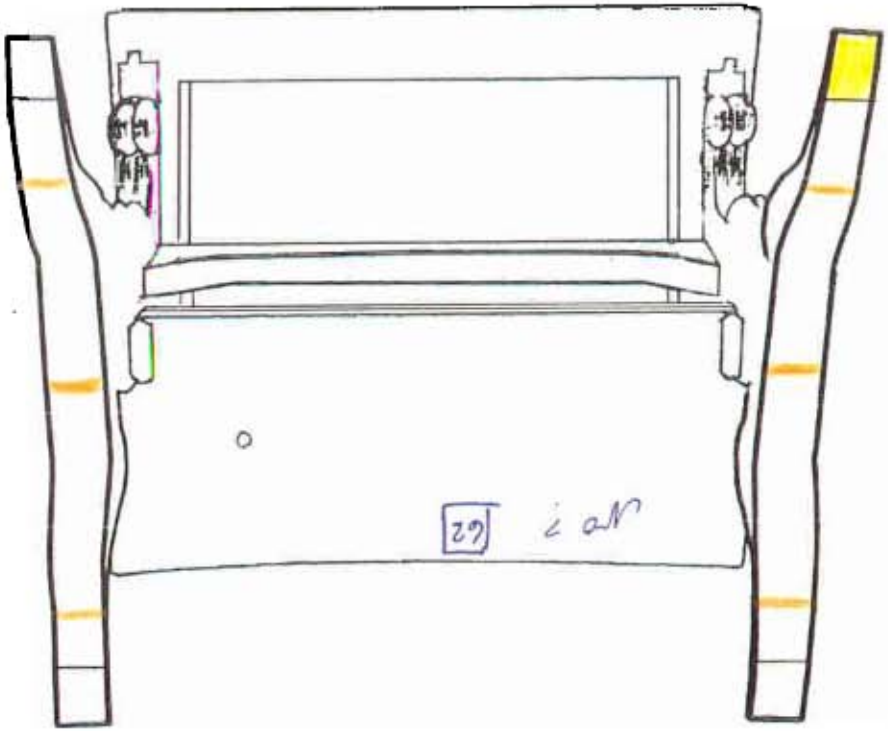

Bottom

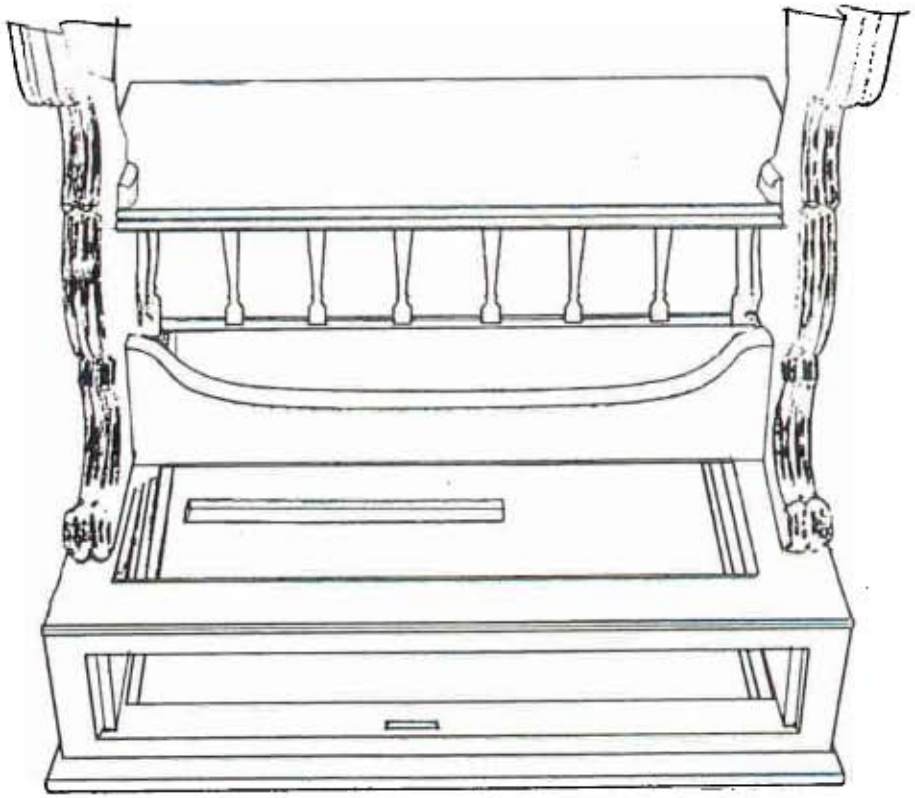

- Loose/broken/delaminated
- Damage/wear/hole
- Previous repair
- Replaced piece
- Missing
- Spindles not original to desk
- Add-ons
- Inscriptions

United States Senate Desk

Desk # 45

Drawer Front, Outer Surface

Rear Surface of Drawer Front

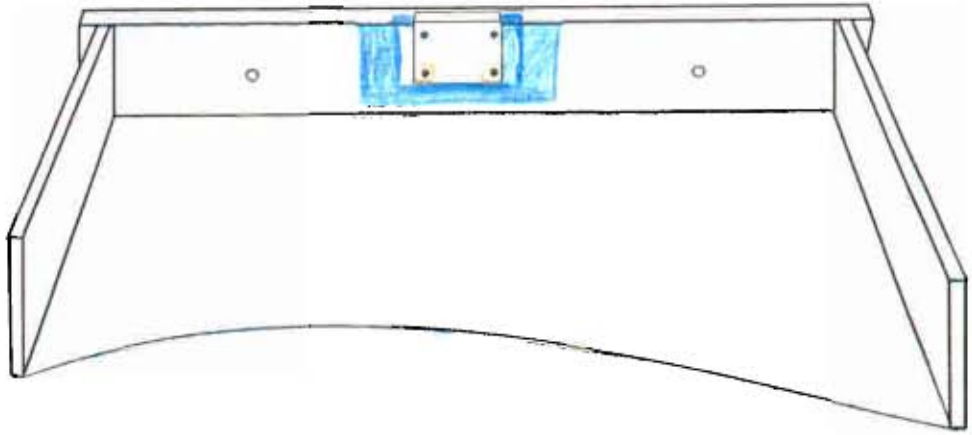

Loose/broken/delaminated

Damage/wear/hole

Previous repair

Replaced piece

Missing

Spindles not original to desk

Add-ons

Inscriptions

United States Senate Desk

Desk # 45

Inside Surface of Left Drawer Side

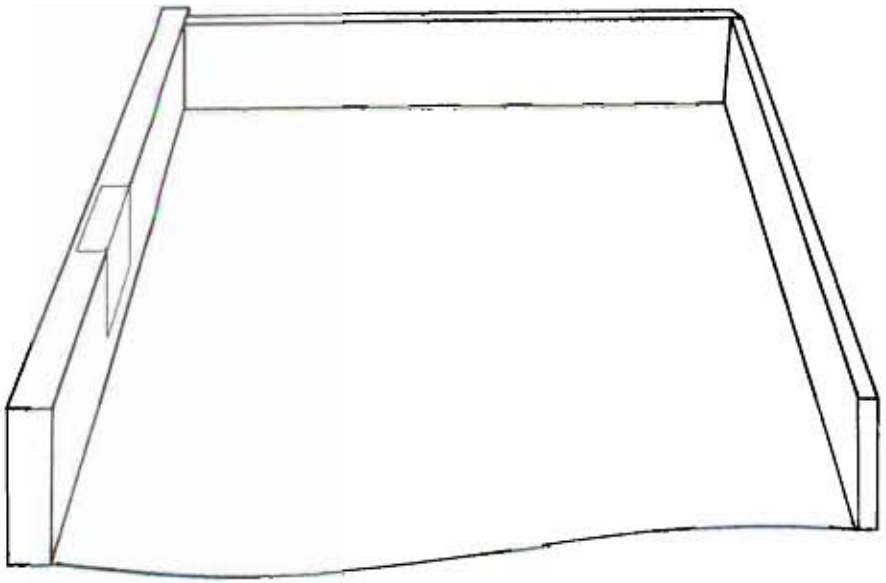

Inside Surface of Right Drawer Side

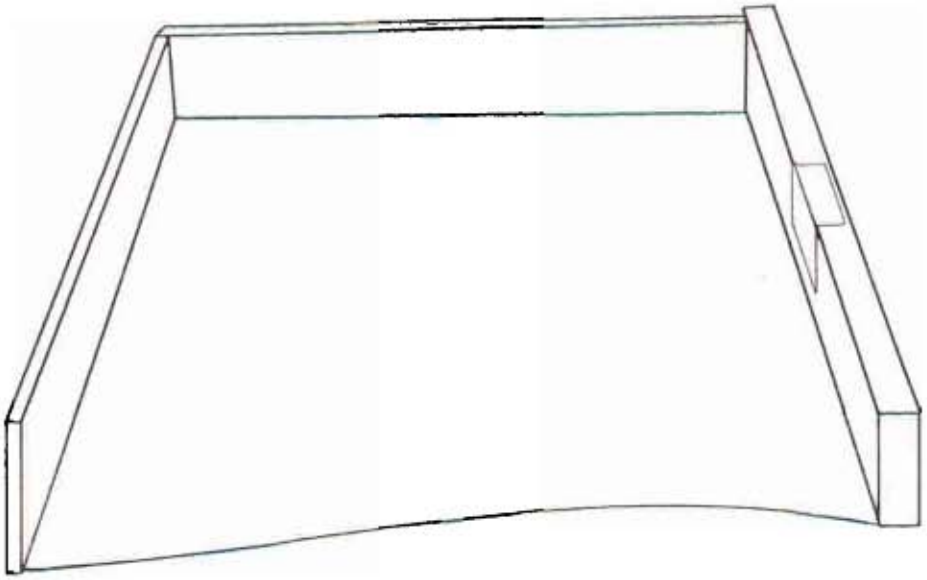

- Loose/broken/delaminated
- Damage/wear/hole
- Previous repair
- Replaced piece
- Missing
- Spindles not original to desk
- Add-ons
- Inscriptions

United States Senate Desk

Desk # 45

Rear Surface of Drawer Back

Front Surface of Drawer Back

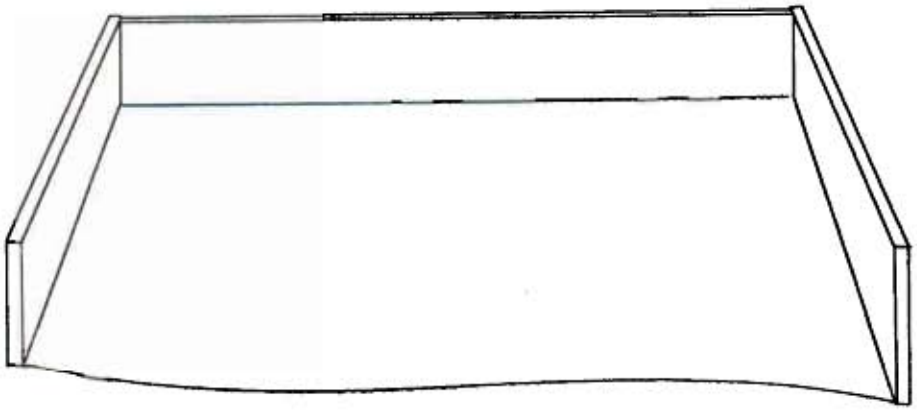

- Loose/broken/delaminated
- Damage/wear/hole
- Previous repair
- Replaced piece
- Missing
- Spindles not original to desk
- Add-ons
- Inscriptions

United States Senate Desk

Desk # 45

Upper Surface of Drawer Bottom

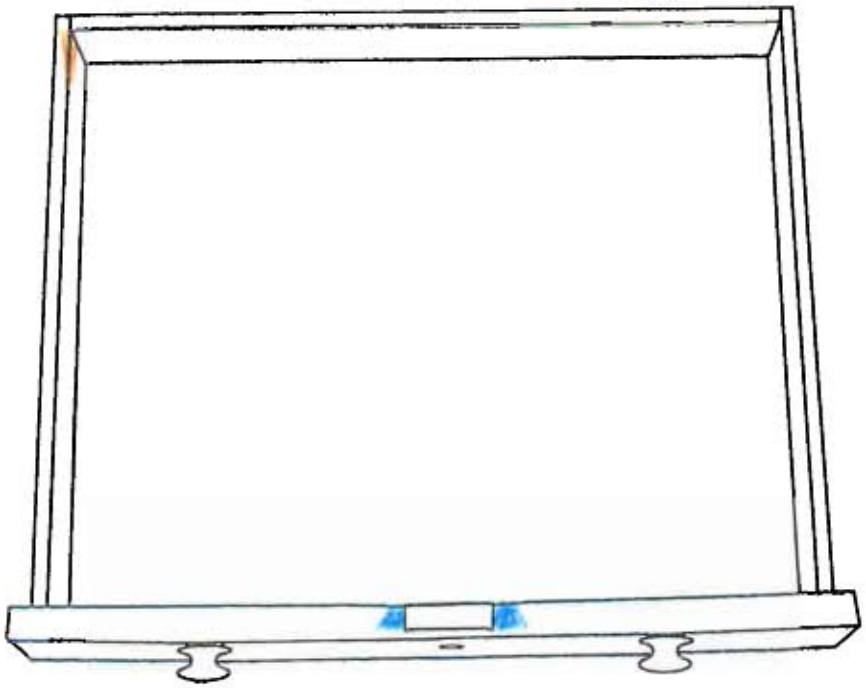

Lower Surface of Drawer Bottom

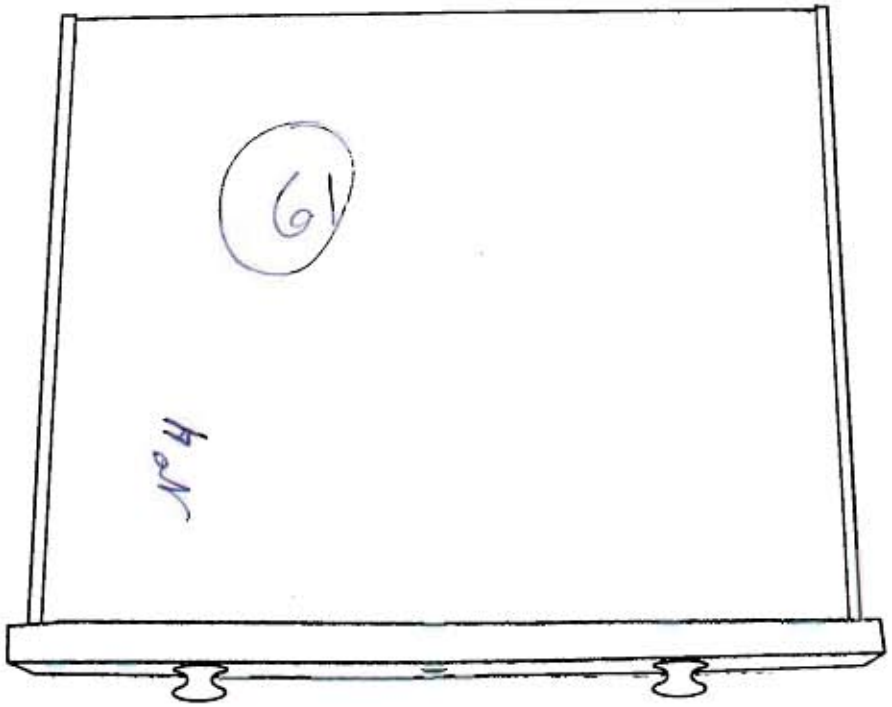

- Loose/broken/delaminated
- Damage/wear/hole
- Previous repair
- Replaced piece
- Missing
- Spindles not original to desk
- Add-ons
- Inscriptions

United States Senate Desk

Desk # 45

Outside Surface, Right Drawer Side

Outside Surface, Left Drawer Side

- Loose/broken/delaminated
- Damage/wear/hole
- Previous repair
- Replaced piece
- Missing
- Spindles not original to desk
- Add-ons
- Inscriptions